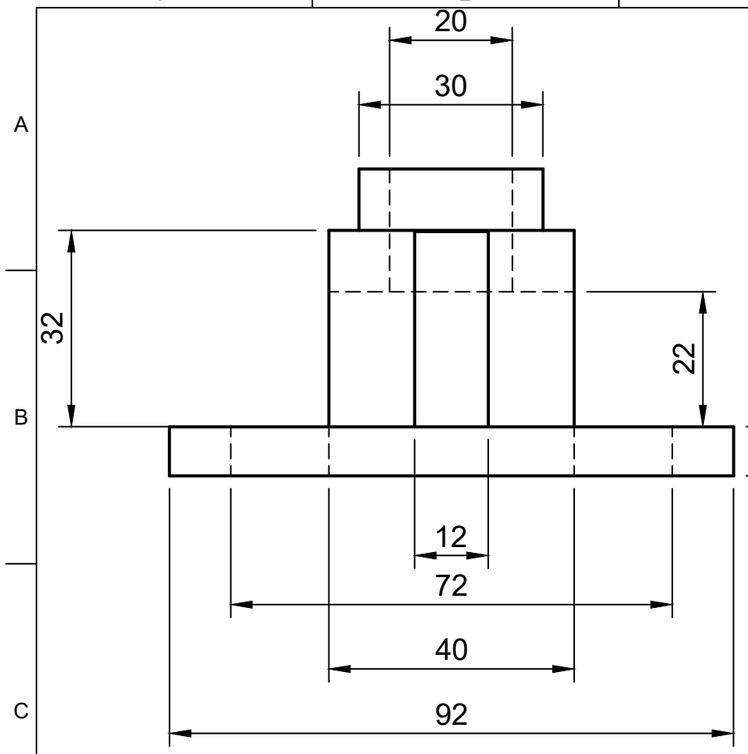

FRONT VIEW

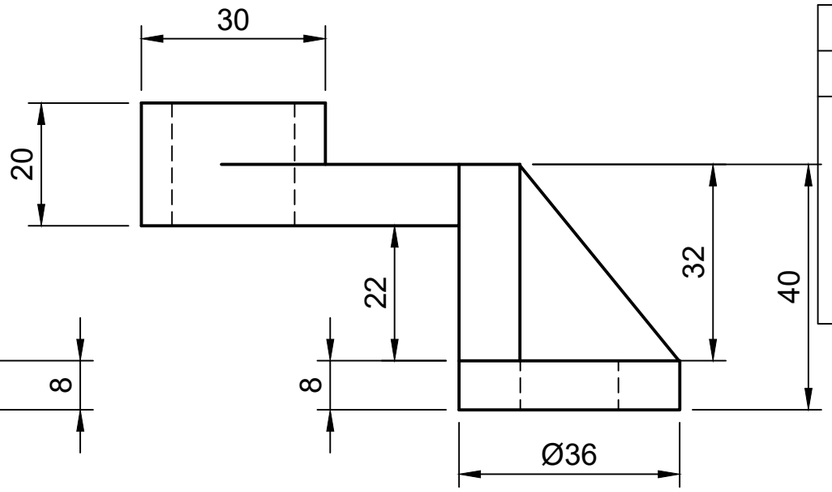

SIDE VIEW

Parts List			
Item	Part Name	Material	Mass
1	4- CREATE A 3D SOLID MODEL FROM ISOMETRIC DRAWING (~recovered)	Steel	439.254 g

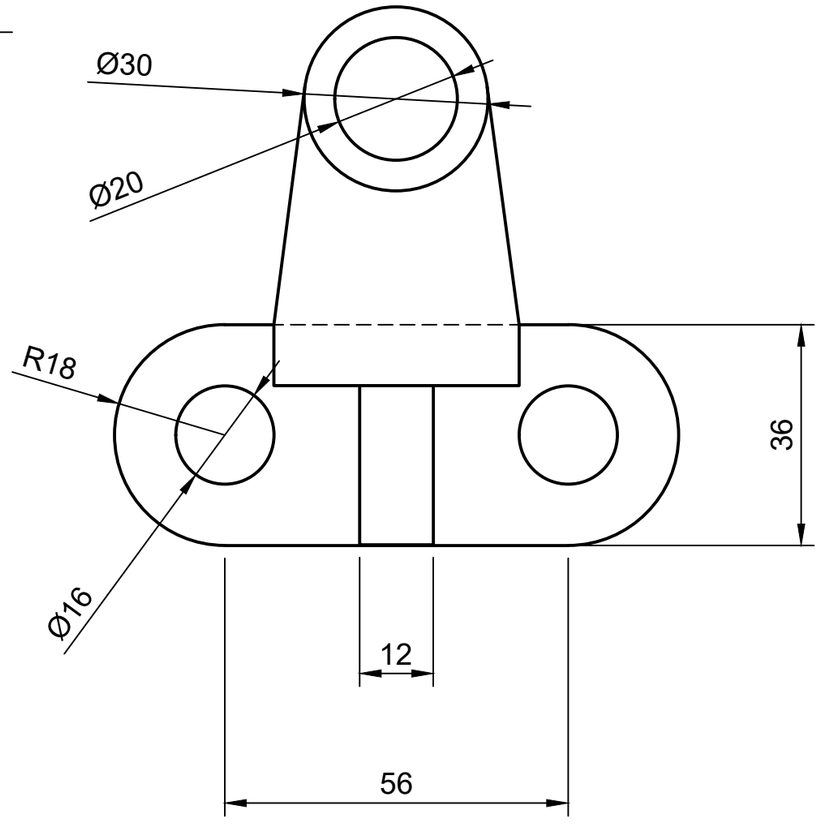

TOP VIEW

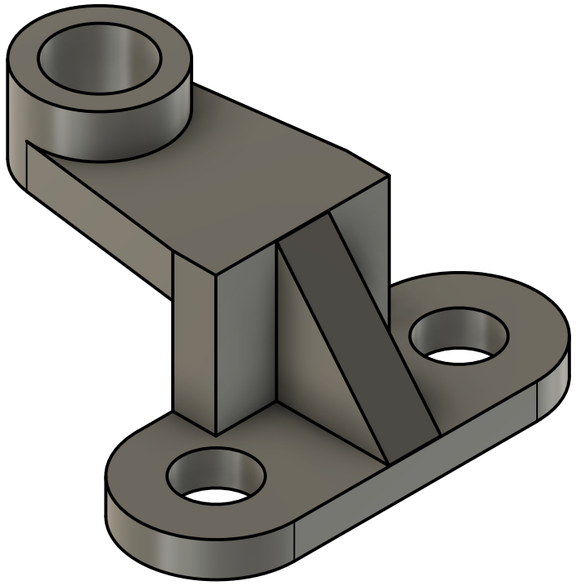

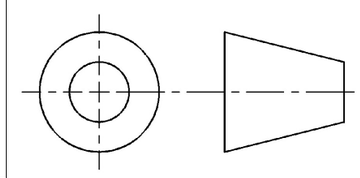

Dept.	Technical reference	Created by	Approved by
IT	212225220086	RITIKA S	Dr SARAVANAN MP
		Document type: ISOMETRIC	Document status
		Title: 4- CREATE A 3D SOLID MODEL FROM ISOMETRIC DRAWING	DWG No.
			Rev. 2.2 / Date of issue 11-02-2026 / Sheet 4/11